Work Order ID 45693

June 29, 2009 10:44:49 AM

Item ID: D3186-4
Revision ID: D
Item Name: Spacepod Door, RH

Accept

Setup Start
Stop

Start Date: 15/07/2009 **Start Qty:** 1.00
Required Date: 03/08/2009 **Req'd Qty:** 1.00
Reference:

Cust Item ID:
Customer:

Run Start
Stop

Approvals: **Process Plan:** **Date:** **Tooling:** **Date:**
QC: **Date:** **SPC (Y/N):** **Date:**

Sequence ID/ Work Center ID	Operation Description	Set Up/ Run Hours	Draw Number	Draw Rev.	Plan Code	Accept Qty	Reject Qty	Reject Number	Insp. Stamp
Draw Nbr	**Revision Nbr**								
D3186	Rev D								
100	Small Fab	0.00							
Small Fab	**Memo**	0.00							
Small Fab	1-Drill holes and cut out slots for latch as per dwg D3186 (D3186-4 detail)								
110	QC5- Inspect part completeness to step on W/O	0.00							
QC	**Memo**	0.00							
Quality Control									
120	Identify as per dwg & Stock Location:	0.00							
Packaging	**Memo**	0.00							
Packaging									

090713

=> 8 09/07/13

W/O 45455

Work Order ID 45693

June 29, 2009 10:44:49 AM

Item ID: D3186-4
Revision ID: D
Item Name: Spacepod Door, RH

Accept

Setup Start
Stop

Start Date: 15/07/2009 **Start Qty:** 1.00
Required Date: 03/08/2009 **Req'd Qty:** 1.00
Reference:

Cust Item ID:
Customer:

Run Start
Stop

Approvals: **Process Plan:** **Date:** **Tooling:** **Date:**
QC: **Date:** **SPC (Y/N):** **Date:**

Sequence ID/ Work Center ID	Operation Description	Set Up/ Run Hours	Draw Number	Draw Rev.	Plan Code	Accept Qty	Reject Qty	Reject Number	Insp. Stamp
130	QC21- Final Inspection - Work Order Release	0.00							
QC Quality Control	**Memo**	0.00							

09/07/14

09.07.14

Picklist Print

June 29, 2009 10:44:48 AM

Work Order ID: 45693

Parent Item: D3186-4RevD

Parent Item Name: Spacepod Door, RH

Comments:

Start Date: 15/07/2009 **Required Date:** 03/08/2009

Start Qty: 1.00 **Required Qty:** 1.00

Component Item ID/ Item Name	Replacement Item ID	Mfg/ Purch	Bin Item	Primary Location	Last Location	Route Seq ID	Unit of Measure	Qty on Hand	Remaining Qty To Pick	Qty Issued	Date Issued	Status
D3186-2MRevD SPACEPOD DOOR RH		Manufactured	No			100	Each	0.0000	1.0000			

Date: Tuesday, 10/02/2009 3:06:37 PM
User: Julie Dawson

Process Sheet

Customer : CU-DAR001 Dart Helicopters Services
Job Number : 45693
Estimate Number : 12636
P.O. Number :
This Issue : 10/02/2009 **S.O. No.** :
Prsht Rev. : NC
First Issue : / / **Type** : PURCHASED PARTS
Previous Run : 39650B
Written By :
Checked & Approved By : JLD 09.02.10
Comment : Est Rev:A New Issue 07-01-11 EC
est rev.B revD 07.03.07 ec

Drawing Name : SPACEPOD DOOR RH
Part Number : D31864
Drawing Number : D3186 REV.D
Project Number : N/A
Drawing Revision : D
Material :
Due Date : 28/02/2009 **Qty:** 1 **Um:** Each

Additional Product

Job Number:

Seq. #:	Machine Or Operation:	Description :
1.0	45693A	SPACEPOD DOOR RH

Comment: Sub-Component SPACEPOD DOOR RH
1 x D3186-2M Batch B 45693A 090713

2.0	SMALL FAB 1	SMALL & MEDIUM FAB RESOURCE 1

Comment: SMALL & MEDIUM FAB RESOURCE 1

1-Drill holes and cut out slots for latch as per dwg D3186 (D3186-4 detail) 090713

3.0	QC5	INSPECT WORK TO CURRENT STEP

Comment: INSPECT WORK TO CURRENT STEP 09/02/13

4.0	PACKAGING 1	PACKAGING RESOURCE #1

Comment: PACKAGING RESOURCE #1
Identify and Stock
Location:_____

5.0	QC21	FINAL INSPECTION/W/O RELEASE

Comment: FINAL INSPECTION/W/O RELEASE

Job Completion

Dart Aerospace Ltd

W/O:		WORK ORDER CHANGES					
DATE	STEP	PROCEDURE CHANGE	By	Date	Qty	Approval Chief Eng / Prod Mgr	Approval QC Inspector
09-07-00	100	Dwg D3186-4 detail D .98 typ is now corrected to ~~1.20~~ 1.130	[illegible]	090713		05.07.13 [illegible] QS1042	[illegible] 09/07/13

Part No: _____ PAR #: _____ Fault Category: _____ NCR: Yes No DQA: _____ Date: _____

Resolution: _____ Disposition: _____ QA: N/C Closed: _____ Date: _____

NCR:		WORK ORDER NON-CONFORMANCE (NCR)						
DATE	STEP	Description of NC Section A	Corrective Action Section B			Verification Section C	Approval Chief Eng	Approval QC Inspector
			Initial Chief Eng	Action Description Chief Eng	Sign & Date			

NOTE: Date & initial all entries

DESIGN	DRAWN BY	DART AEROSPACE LTD HAWKESBURY, ONTARIO, CANADA	
DS	LE		
CHECKED	APPROVED	DRAWING NO.	REV. D
		D3186	SHEET 1 OF 5
DATE		TITLE	SCALE
07.02.22		SPACEPOD DOOR	NTS

A	03.03.27	NEW ISSUE
B	06.09.25	DIMS UPDATED TO MATCH PRODUCT FOAM PATTERN UPDATED D3186-1M/-2M/-3/-4 ADDED
C	06.12.13	REMOVED D0600-XXX LABELS
D	07.02.22	UPDATE DIMENSIONS

MAIN LAYUP
9 OZ SATIN (9 SQ FEET)
9 OZ SATIN (9 SQ FEET)
FOAM
9 OZ SATIN (9 SQ FEET)
12 OZ UNIDIRECTIONAL
9 OZ SATIN (9 SQ FEET)
RESIN (35-45% BY WEIGHT)
PEEL PLY

RELEASED
07.02.27

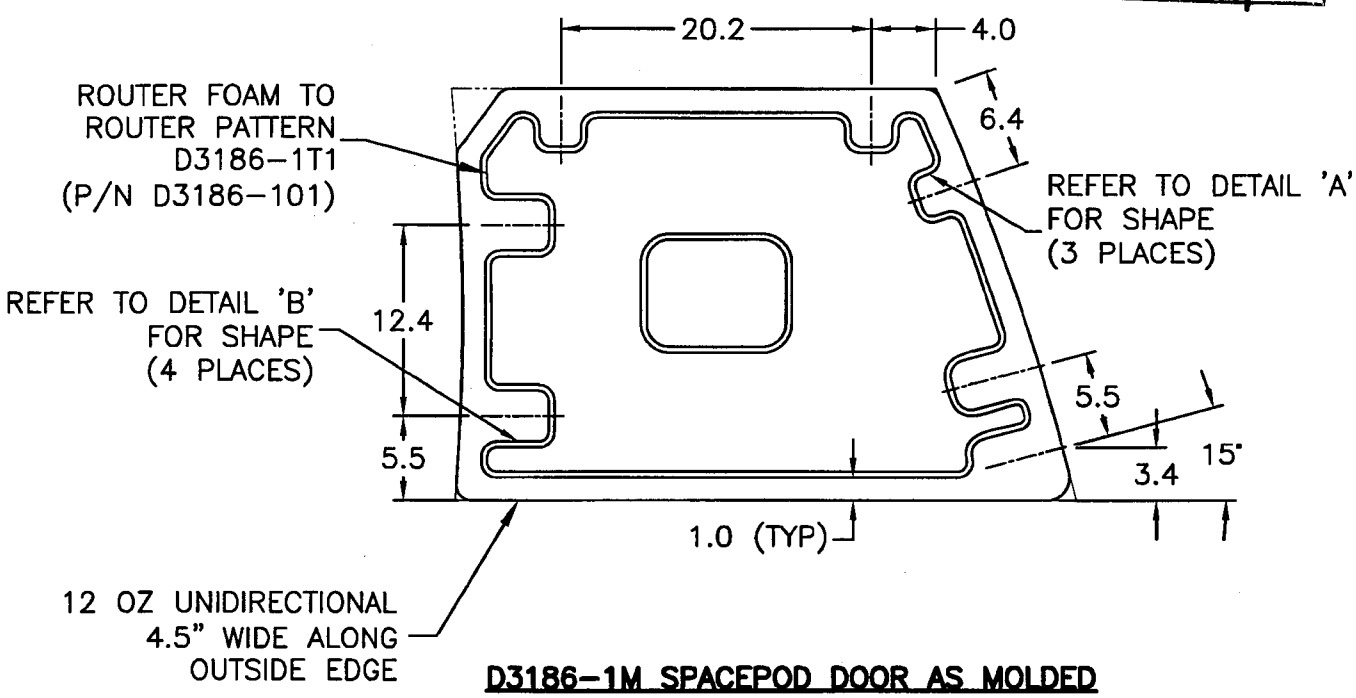

D3186-1M SPACEPOD DOOR AS MOLDED

NOTES:
1) USE MOLD DT8005 FOR DOOR LAYUP
2) RESIN: EPOCAST 50-A/9816 OR DERAKANE 470-36/411/510A40
3) FOAM: 3/8", A500 CORE-CELL OR DIVINYCELL OR AIREX OR KLEGECELL
4) FIBRE: 9.7 OZ 7781 WEAVE "S" GLASS ("9 OZ SATIN")
   12 OZ UNIDIRECTIONAL FIBERGLASS ("12 OZ UNIDIRECTIONAL")
5) LAMINATE PER DART QSI 006 4.0
6) LAMINATION SCHEDULE PER THIS DRAWING
7) FINISH INSIDE/OUTSIDE WITH DUPONT HIGHBUILD GREY PRIMER 1144-S
8) ALL DIMENSIONS ARE IN INCHES
9) TOLERANCES ARE PER DART QSI 018 UNLESS OTHERWISE NOTED

SHOP COPY
RETURN TO
ENGINEERING
UNCONTROLLED COPY
SUBJECT TO AMENDMENT
WITHOUT NOTICE
WORK ORDER
NO. 45693

DESIGN	DRAWN BY	DART AEROSPACE LTD HAWKESBURY, ONTARIO, CANADA	
DS	LE		
CHECKED	APPROVED	DRAWING NO.	REV. D
		D3186	SHEET 2 OF 5
DATE		TITLE	SCALE
07.02.22		SPACEPOD DOOR	NTS

RELEASED
07.02.27

MAIN LAYUP
9 OZ SATIN (9 SQ FEET)
9 OZ SATIN (9 SQ FEET)
FOAM
9 OZ SATIN (9 SQ FEET)
12 OZ UNIDIRECTIONAL
9 OZ SATIN (9 SQ FEET)
RESIN (35–45% BY WEIGHT)
PEEL PLY

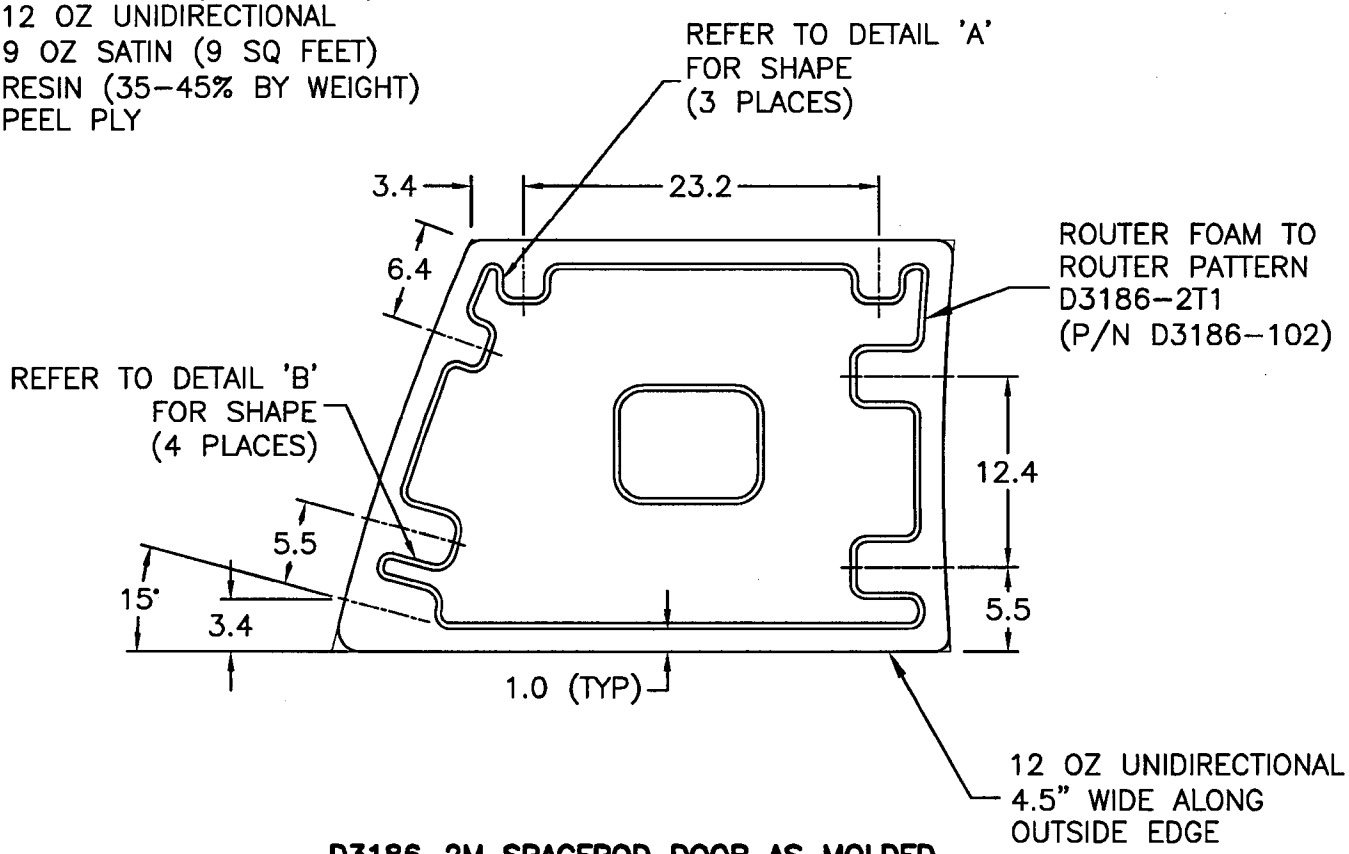

D3186–2M SPACEPOD DOOR AS MOLDED

NOTES:
1) USE MOLD DT8006 FOR DOOR LAYUP
2) RESIN: EPOCAST 50–A/9816 OR DERAKANE 470–36/411/510A40
3) FOAM: 3/8", A500 CORE–CELL OR DIVINYCELL OR AIREX OR KLEGECELL
4) FIBRE: 9.7 OZ 7781 WEAVE "S" GLASS ("9 OZ SATIN")
   12 OZ UNIDIRECTIONAL FIBERGLASS ("12 OZ UNIDIRECTIONAL")
5) LAMINATE PER DART QSI 006 4.0
6) LAMINATION SCHEDULE PER THIS DRAWING
7) FINISH INSIDE/OUTSIDE WITH DUPONT HIGHBUILD GREY PRIMER 1144–S
8) ALL DIMENSIONS ARE IN INCHES
9) TOLERANCES ARE PER DART QSI 018 UNLESS OTHERWISE NOTED

SHOP COPY
RETURN TO
ENGINEERING
UNCONTROLLED COPY
SUBJECT TO AMENDMENT
WITHOUT NOTICE
WORK ORDER
NO. 48693

DESIGN	DRAWN BY	DART AEROSPACE LTD HAWKESBURY, ONTARIO, CANADA	
DS	LE		
CHECKED	APPROVED	DRAWING NO.	REV. D
		D3186	SHEET 3 OF 5
DATE		TITLE	SCALE
07.02.22		SPACEPOD DOOR	NTS

RELEASED
07.02.27

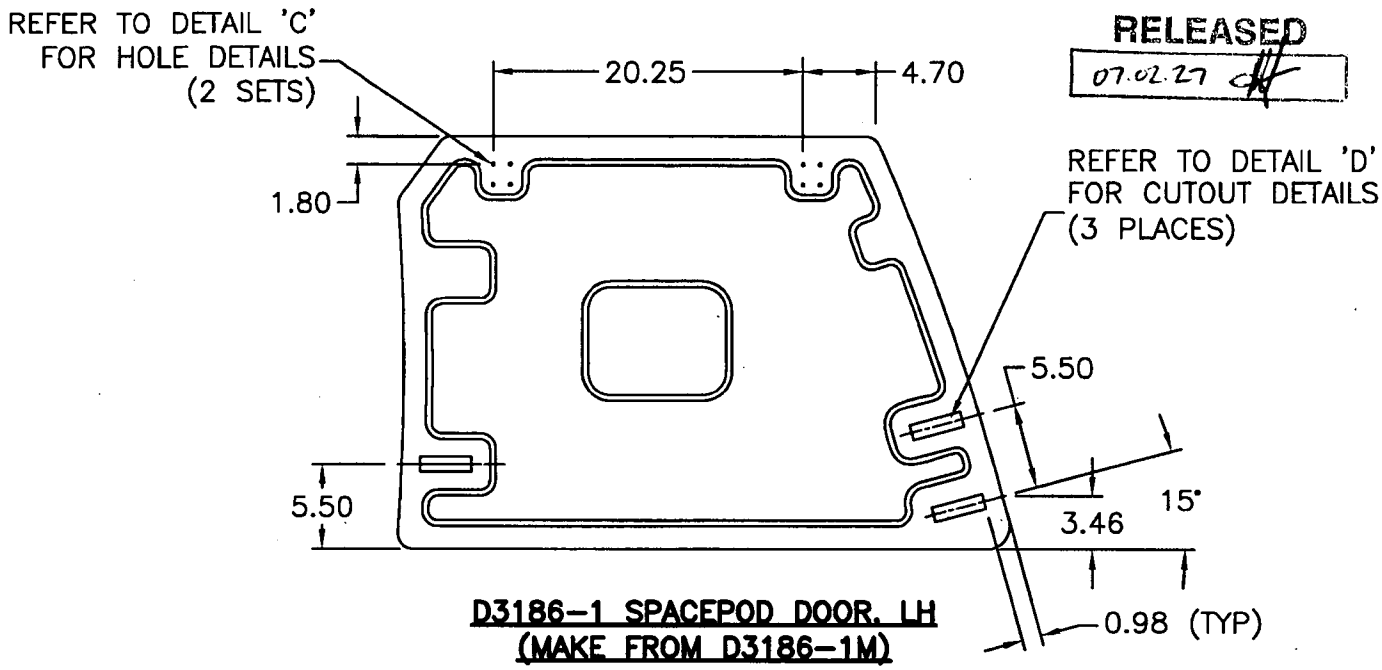

D3186-1 SPACEPOD DOOR, LH
(MAKE FROM D3186-1M)

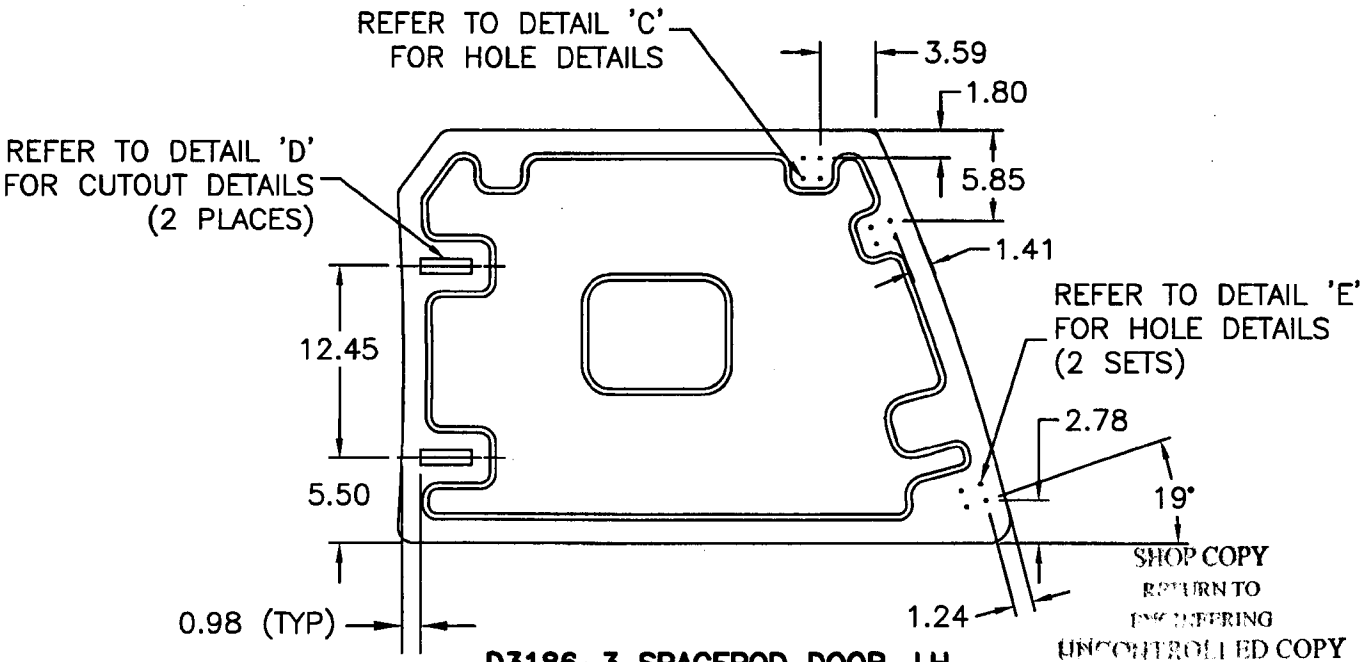

D3186-3 SPACEPOD DOOR, LH
(MAKE FROM D3186-1M)

SHOP COPY
RETURN TO
ENGINEERING
UNCONTROLLED COPY
SUBJECT TO AMENDMENT
WITHOUT NOTICE
WORK ORDER
NO. 45623

NOTES:
1) ALL DIMENSIONS ARE IN INCHES
2) TOLERANCES ARE PER DART QSI 018 UNLESS OTHERWISE NOTED

DESIGN	DRAWN BY	DART AEROSPACE LTD HAWKESBURY, ONTARIO, CANADA	
DS	LE		
CHECKED	APPROVED	DRAWING NO.	REV. D
		D3186	SHEET 4 OF 5
DATE		TITLE	SCALE
07.02.22		SPACEPOD DOOR	NTS

RELEASED
07-02-27

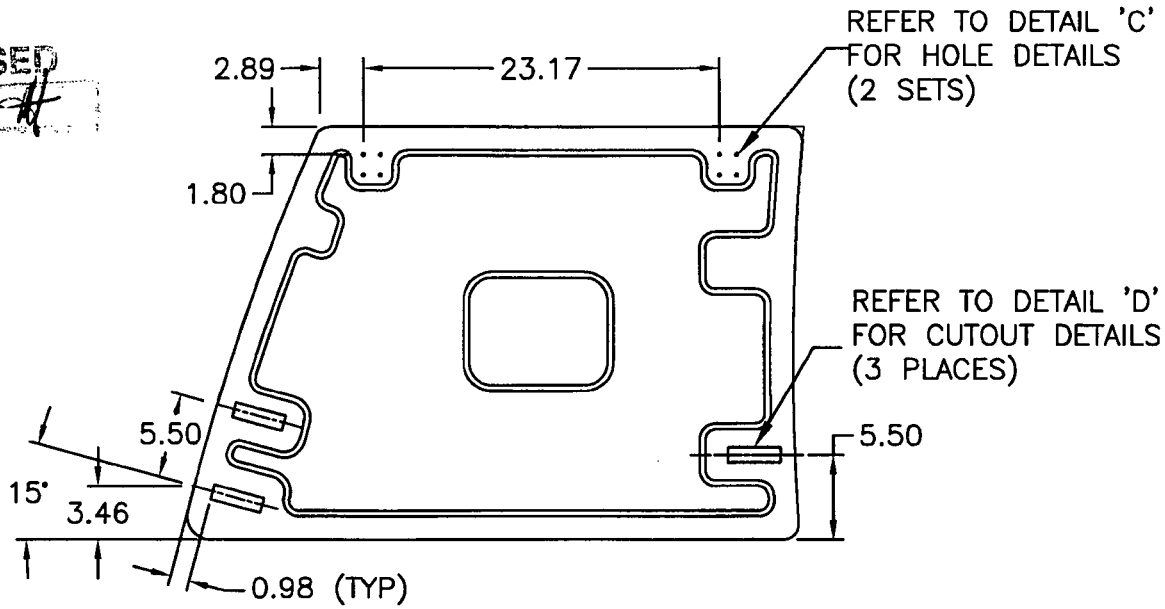

D3186-2 SPACEPOD DOOR, RH
(MAKE FROM D3186-2M)

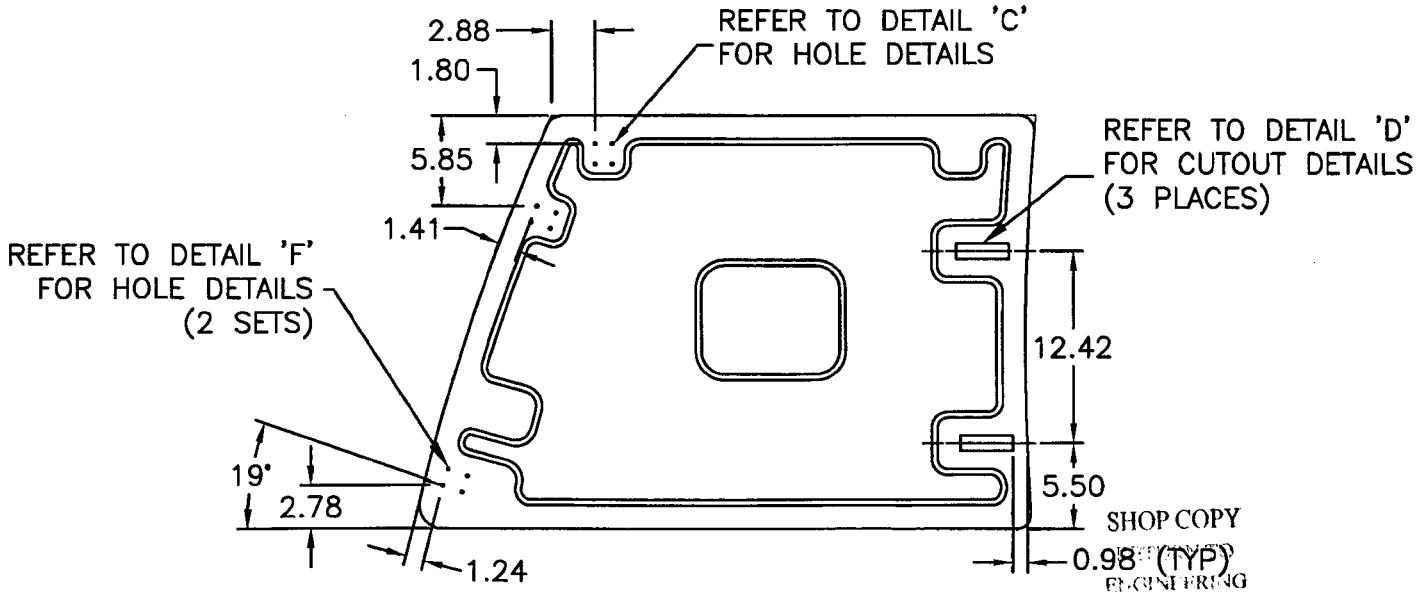

D3186-4 SPACEPOD DOOR, RH
(MAKE FROM D3186-2M)

SHOP COPY
ENGINEERING
UNCONTROLLED COPY
SUBJECT TO AMENDMENT
WITHOUT NOTICE
WORK ORDER
NO. 45693

NOTES:
1) ALL DIMENSIONS ARE IN INCHES
2) TOLERANCES ARE PER DART QSI 018 UNLESS OTHERWISE NOTED

DESIGN	DRAWN BY	DART AEROSPACE LTD HAWKESBURY, ONTARIO, CANADA	
DS	LE		
CHECKED	APPROVED	DRAWING NO.	REV. D
		D3186	SHEET 5 OF 5
DATE		TITLE	SCALE
07.02.22		SPACEPOD DOOR	NTS

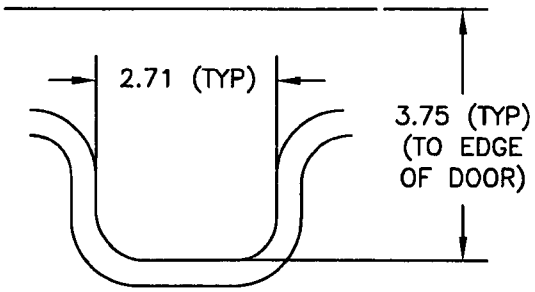

DETAIL A

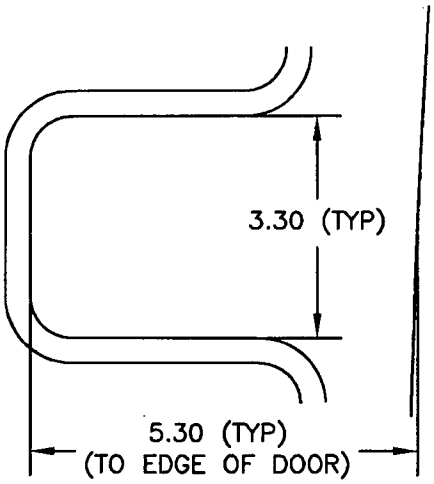

DETAIL B

RELEASED
07.02.27

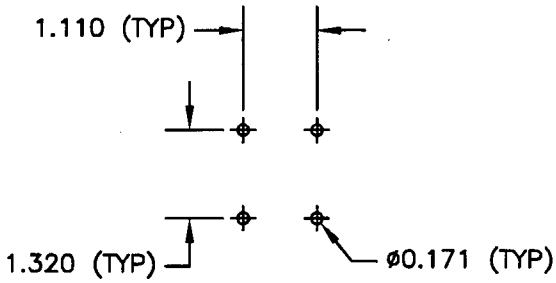

DETAIL C

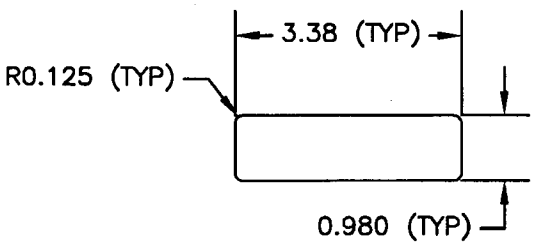

NOTE: ENSURE THAT CUTOUT IS PERPENDICULAR TO EDGE OF DOOR

DETAIL D

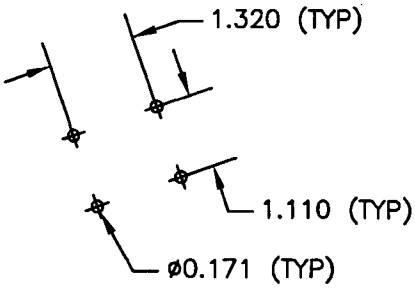

DETAIL E

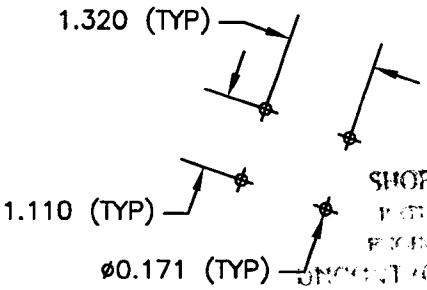

DETAIL F

SHOP COPY
RETURN TO
PROOFREADING
UNCONTROLLED COPY
SUBJECT TO AMENDMENT
WITHOUT NOTICE
NO. 45693

NOTES:
1) ALL DIMENSIONS ARE IN INCHES
2) TOLERANCES ARE PER DART QSI 018 UNLESS OTHERWISE NOTED